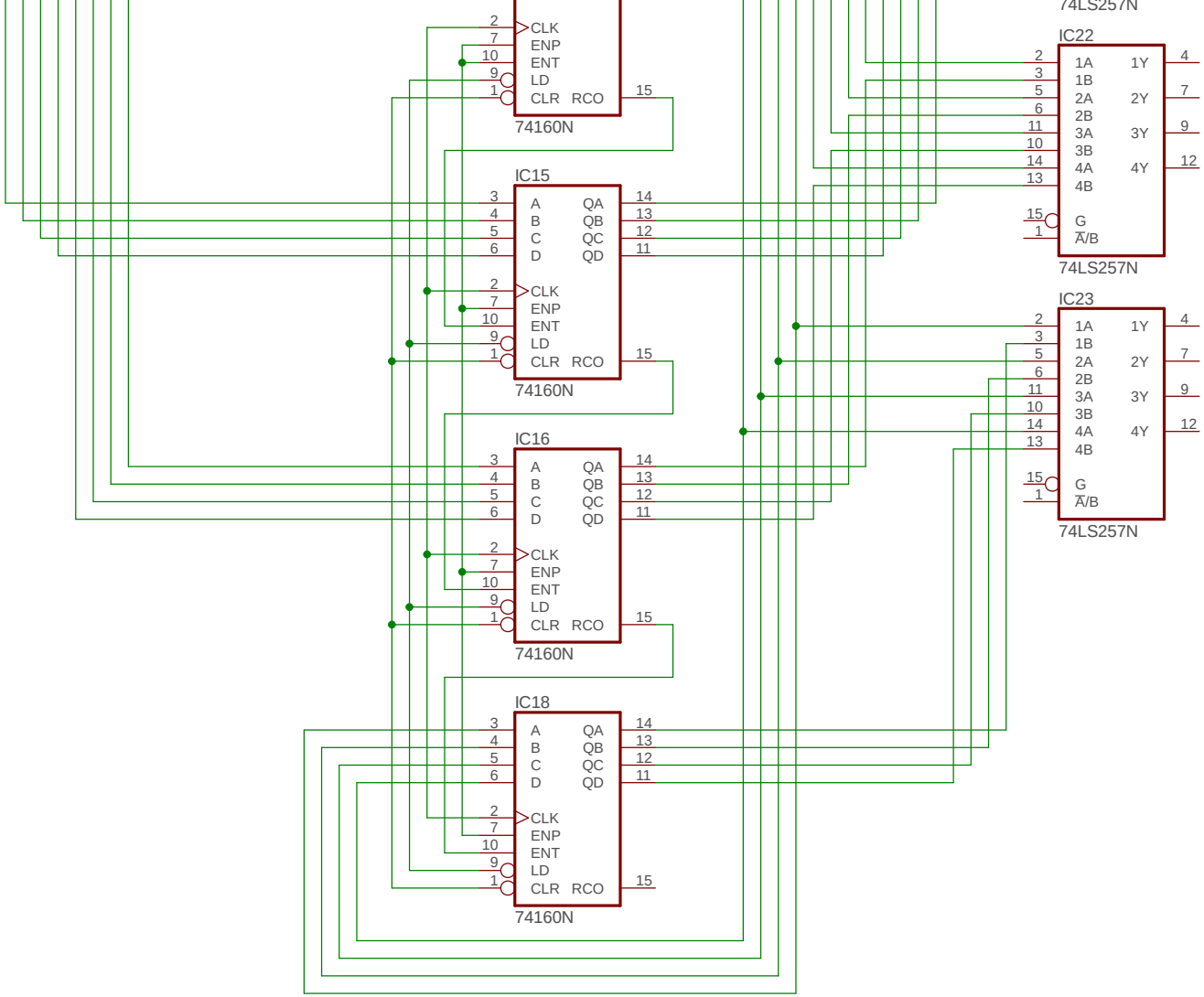
74LS257N
IC22
1A 1Y
1B
2A 2Y
2B
3A 3Y
3B
4A 4Y
4B
G
A/B
74LS257N
IC23
1A 1Y
1B
2A 2Y
2B
3A 3Y
3B
4A 4Y
4B
G
A/B
74LS257N
CLK
ENP
ENT
LD
CLR RCO
74160N
IC15
A QA
B QB
C QC
D QD
CLK
ENP
ENT
LD
CLR RCO
74160N
IC16
A QA
B QB
C QC
D QD
CLK
ENP
ENT
LD
CLR RCO
74160N
IC18
A QA
B QB
C QC
D QD
CLK
ENP
ENT
LD
CLR RCO
74160N

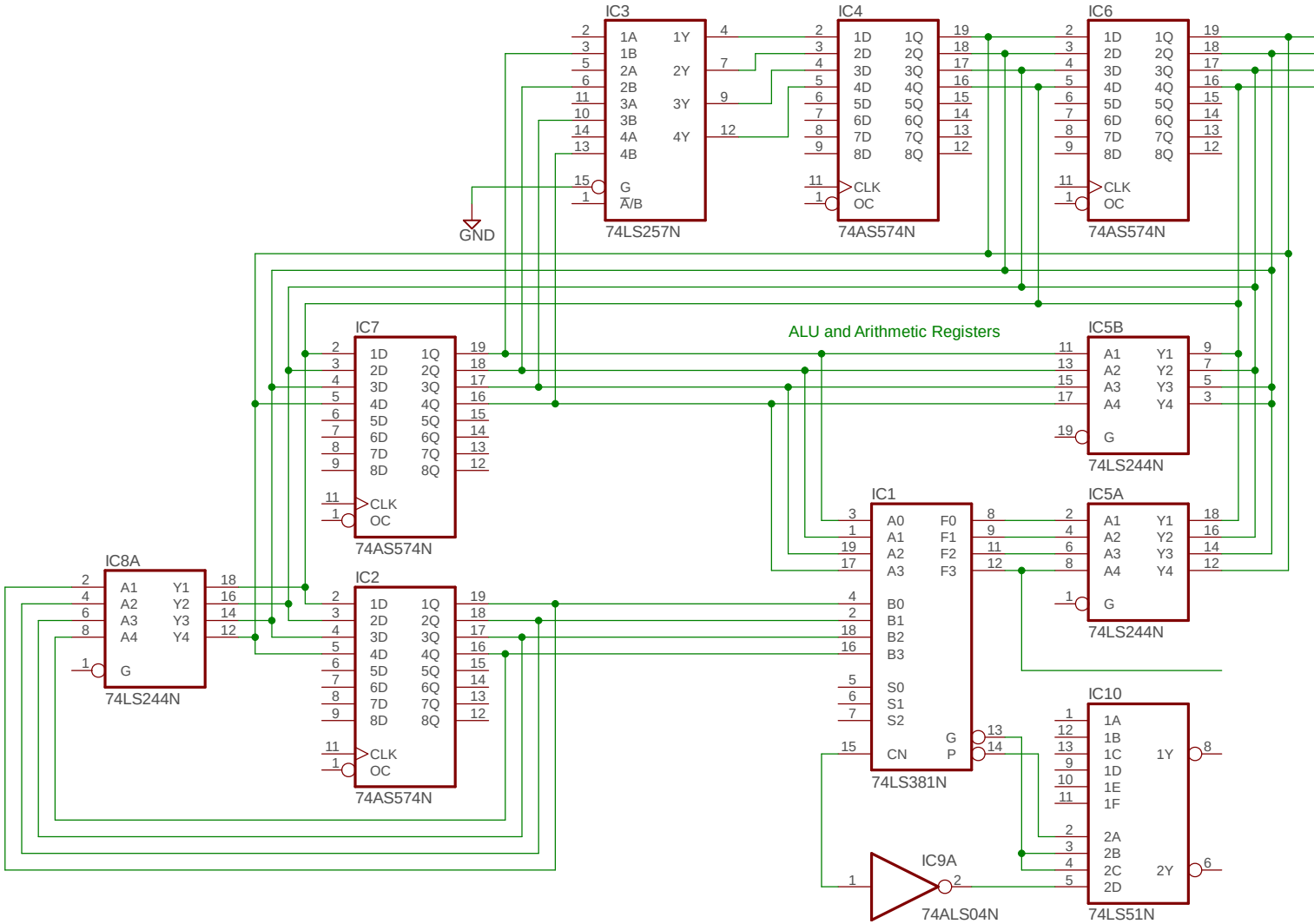
IC3
74LS257N
IC4
74AS574N
IC6
74AS574N
GND
ALU and Arithmetic Registers
IC7
74AS574N
IC5B
74LS244N
IC1
74LS381N
IC5A
74LS244N
IC8A
74LS244N
IC2
74AS574N
IC10
74LS51N
IC9A
74ALS04N

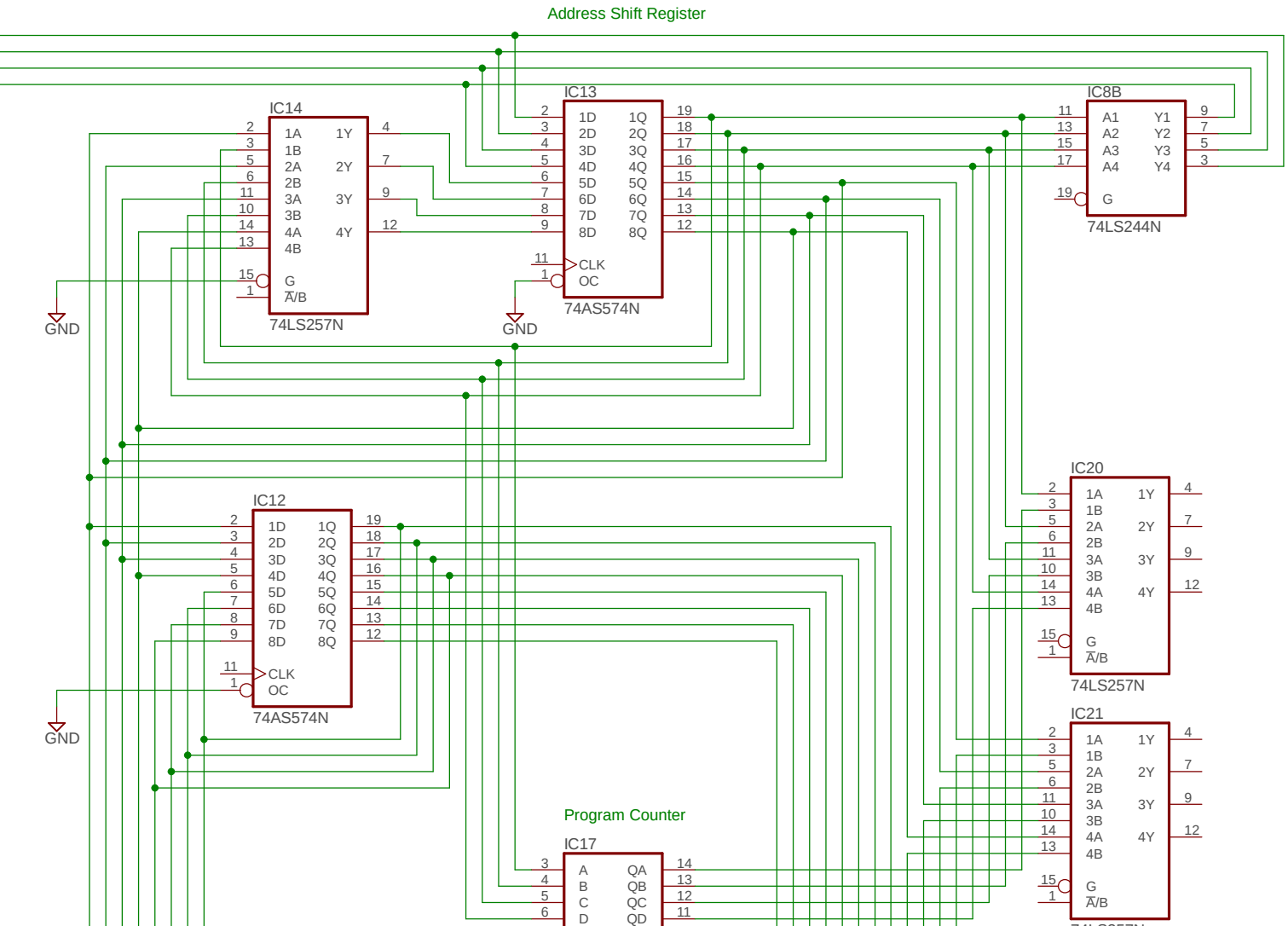
Address Shift Register
IC14
74LS257N
IC13
74AS574N
IC8B
74LS244N
IC20
74LS257N
IC12
74AS574N
IC21
Program Counter
IC17
GND
GND
GND